ELTEC INSTRUMENTS, INC.

ELTECdata #125
Gas Detection and Analysis With Pyroelectric Detectors

By
David Cima
ELTEC INSTRUMENTS, INC.

Many gases have strong absorption bands in the infrared region of the spectrum. If a gas sample is in a tube with caps at each end that transmit the wavelength(s) to be monitored, then the greater the concentration of the gas . . . the greater will be the attenuation thru the tube of the identifying or analytical wavelength.

Pyroelectric detectors are very sensitive and have excellent signal-to-noise ratios. However, they give no output to a signal that is either relatively constant or slowly varying. Thus monitoring or detection involves pulsing or modulating optical energy to the detector such that the output is the difference between a ground state and the transmission of a particular wavelength. The smaller the difference, the lower the transmission, the greater the concentration of the gas.

In one approach (Figure 1) an IR source (filament) is pulsed on and off at one side of the sample tube. The optical radiation travels through the sample to a pyroelectric detector which has an optical filter covering the sensitive element. The filter blocks all of the out-of-band radiation (unwanted wavelengths) and only passes the band of interest. For example, to detect gases of the paraffin series (methane, etc.), a filter passing only 3.4 micrometer optical radiation is used. An incandescent bulb with a quartz or special glass envelope will pass such wavelengths and can be used as a source. Identifying bands at longer wavelengths would require an envelope or "window" of a material other than glass or quartz (or a nichrome filament without envelope).

In another approach, (also Figure 1), a stable resistor or other heat source is operated at a constant intensity and a chopper wheel ("fan" blade) is rotated in front of the source. This optical radiation goes through the tube when an "opening" is in front of the source and the radiation is blocked when a blade is in front of the source. A vibrating chopper is sometimes used instead of a rotating wheel.

The pulsed or chopped approach is usually used when only one wavelength is to be monitored. However, Eltec has twin-channel detectors which employ two different optical filters per detector.

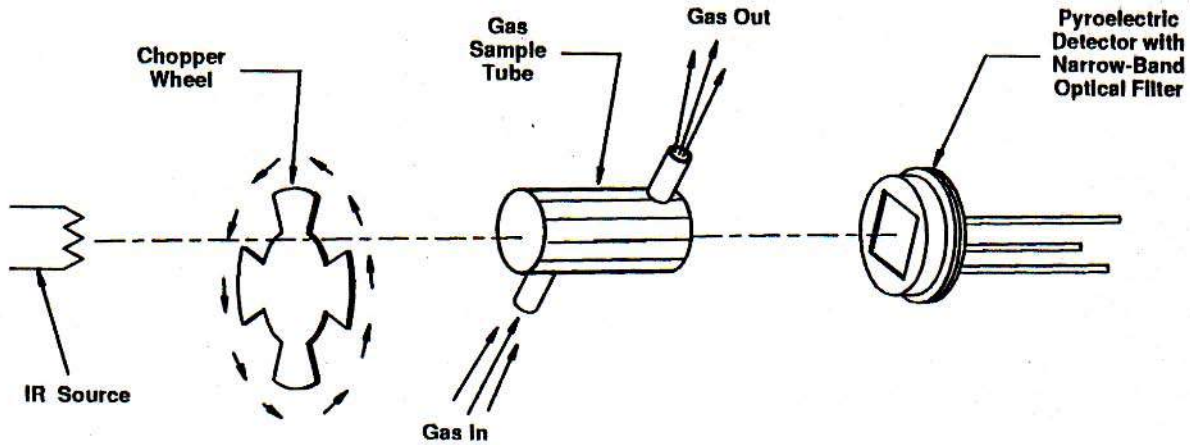

Figure 1: Gas Monitoring at a Single Absorption Wavelength
Note: If the IR source is pulsed, the chopper wheel is not needed

The traditional approach for monitoring two or more wavelengths is to employ a filter wheel (see Figure 2). The wheel contains discs of specific optical filters and the detector has a broadband window that will pass all of the wavelengths passed by the filter wheel. Sampling of the detector output is synchronized to the position of the wheel. Moreover, no chopper is needed because the solid parts of the wheel between each filter block incoming optical radiation to produce the "ground" output.

When two or more wavelengths are monitored, usually one is a reference, a band of very little absorption through the sample. The reference checks the status of the IR source -- which may show aging or other variation in output. When a reference band is monitored a ratiometric approach can be utilized wherein gas concentration is tied not to specific detector output magnitude, but rather to the ratio of the gas-band detector output relative to the reference detector output.

The use of pyroelectric detectors is especially advantageous when monitoring wavelengths beyond 5 micrometers. In the long wave region there is usually the choice of a pyro or a cryogenically cooled detector -- and the pyro is far more cost effective.

Other considerations: One can monitor carbon dioxide in both an air conditioned office building or a closed manufacturing plant. But, air borne oil and particulate matter might have to be filtered from the gas input on the factory carbon dioxide monitor and not for an office. Stack gases are often hot and dirty and necessitate conditioning prior to measurement. For gases under pressure the absorption bandwidths increase (Lorentz pressure broadening). Wide swings in ambient temperature may require appropriate compensation.

And special attention must be paid to the measurement band selected. In an office, nitrous oxide won't be present, so if there is a slight overlap to the CO band, there will be no problem. But in a medical office or hospital it may be critical that the narrowest bands possible be used.

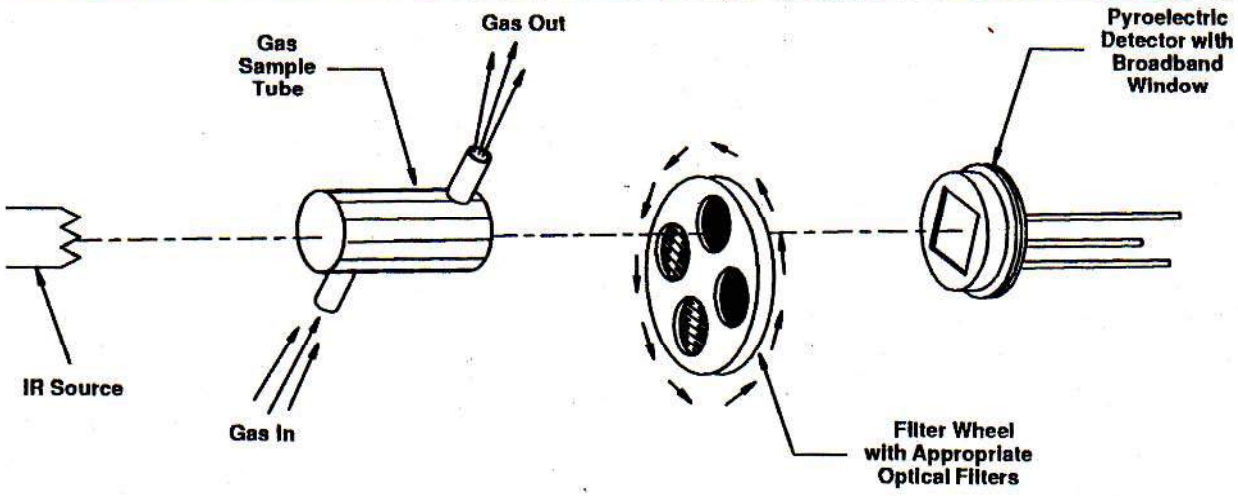

Figure 2: Gas Analysis or Monitoring at Multiple Absorption and Single Reference Wavelengths